ISSN 2395-1621

LCD Brightness Management and Fatigue Recognition using Eye Detection

#1Shinde Shivali, #2Hulawale Trupti, #3Gangapure Ashwarya, #4Prof.P.R Shah

1shindeshivali1505@gmail.com,
2truptihulawale92@gmail.com,
309ishugangapure@gmail.com,
4prasha.1004@gmail.com

#123BE Students,
#4Assistant Professor
Department of E&TC,
JSPM'S BSIOTR, Wagholi, Pune,India

ABSTRACT

Today's world is IT world and digital world. The increasing use of computers, laptops, mobiles in the workplace has brought about the development of a number of health concerns. Many individuals who work at a computers or laptops screen display terminal report a high level of job related complaints and symptoms including eye strain, headaches, blurred vision and dry or irritated eyes. This paper depicts a technique to brightness level of screen will reduce according to the capacity of brightness of human eye and also the system is able to successfully determine whether the person is in the drowsy state. In this paper, we proposed the application of system for detecting drowsiness of operators working in front of machines or human computer interaction. To assess the effectiveness of this technique, we perform eye detection (localizing the centroid of the iris and pupil of eye) on images.

ARTICLE INFO

Article History

Received: 27th May 2017

Received in revised form :

27th May 2017

Accepted: 30th May 2017

Published online :

31st May 2017

Keywords: LCD, Brightness Management, Fatigue Recognition, Eye Detection.

I. INTRODUCTION

All types of screens use the majority of their energy to produce light. LCDs emit this light energy from the backlight. A smaller amount of energy is used to refresh the image on screen. As a general LCD rule, dark images use slightly more energy than light images because energy is required to "activate" the pixel. A "smart" LCD screen uses less energy than a standard LCD. Smart LCDs can dynamically adjust the brightness level of the screen's backlight based on the current image. For example, if most of the pixels are black, there's no need to turn the backlight up to full brightness, so the screen reduces power to the backlight, saving energy. Drowsiness is considered to be a very critical issue causing many fatal accidents, injuries and property damages. Therefore, it has been an area of intensive research in recent years. Drowsiness is an intermediate state between sleepiness and awakening. It reduces a person's attention and vigilance towards the tasks he or she is performing. Drowsiness can prove harmful in driving or operating any machine situations, where the industry employee loss of attention can cause major problems resulting in whatever we working on computers or laptops like loss of important data or files.

An eye tracking system is a device responsible for estimating the gaze. Therefore, the eye candidate can be extracted from the pre-processed eye ROI with skin color detection and morphology operation. Drowsiness is an intermediate state between sleepiness and awakening. It reduces a person's attention and vigilance towards the tasks he or she is performing. Drowsy driving detection is an important issue in today's society because falling asleep while working is clearly harmful. While the propensity to be sleepy affects one's ability to working safely even if the person does not fall asleep. Drowsiness has the following effects

- Decrease operator's attention to surroundings.
- Slow reaction time considerably.

II. LITERATURE SURVEY

Feng Lu, Yusuke Sugano, Takahiro Okabe and Yoichi Sato [1] present the human gaze estimation from eye appearance. It is built upon an adaptive linear regression method that optimally selects training samples for regression.

Nikita Gurudath, H. Bryan Riley [2] present the driver drowsiness monitoring system by analyzing the electroencephalographic signals in a software scripted environment and using a driving simulator.
Nasreen Badruddin, Micheal Drieberg [3] present the significant changes that occur in the EEG power spectrum during monotonous driving.
Surbhi1, Vishal Arora, Shaheed Bhagat Singh **[4]** presented a technique for feature extraction from various regions of interest with the help of Skin color segmentation technique, Thresholding, knowledge based technique for face recognition.
Yi-Qing Wang CMLA, ENS Cachan, France [5] presented a complete algorithmic description, a learning code and a learned face detector that can be applied to any colour image. Since the Viola-Jones algorithm typically gives multiple detections, a post-processing step is also proposed to reduce detection redundancy using a robustness argument.

III. SYSTEM OVERVIEW

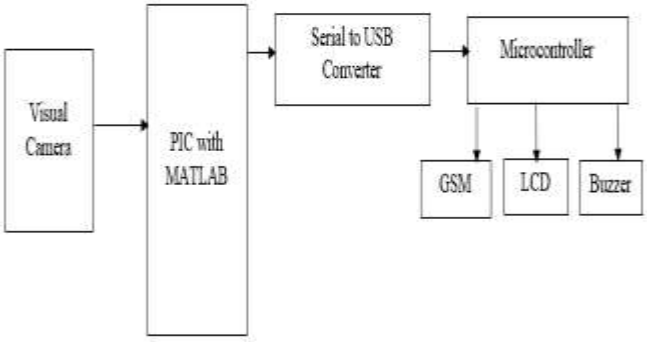

FIG.1 SYSTEM BLOCK DIAGRAM

The system consists of high resolution camera, PC, Microcontroller, LCD, Buzzer and GSM. The image is captured by camera and transmitted to PC for processing. Eye detection is done using camera. On PC, there is MATLAB software. In this software, processing is done on image. To find out drowsiness and LCD brightness we had used MATLAB software. The output of processing is given to the hardware. And output message of drowsiness is send through GSM. If the person is feeling drowsy the buzzer alarms.

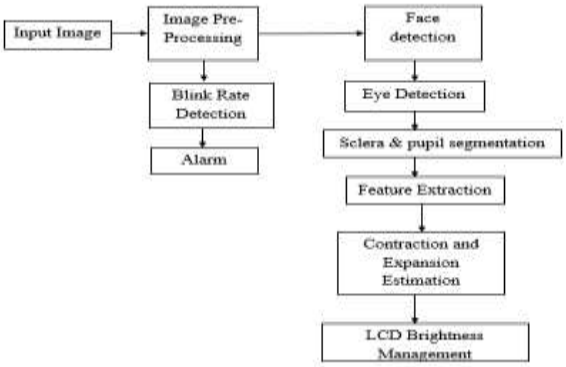

FIG 2. IMAGE PROCESSING SYSTEM

In this frame work there are total nine stages such as image acquisition, face detection, eye detection and Sclera and Pupil Segmentation, blink rate detection, feature extraction, contraction and expansion estimation, LCD brightness management and alarm. Image acquisition is the first step in image processing, in this step an image is acquired from the camera and output of this is given to the image preprocessing block. In image preprocessing, noise is removed using median filter and enhanced the quality of image. From the image preprocessing we detected the face and for this we used Veila John's algorithm which uses the symmetry property. After detection of face, location of eyes is calculated using some geometric features for eg. Eccentricity. Blink rate of eyes is calculated by checking the presence of pupil and scelra. The sclera and pupil segmentation is done using thresholding method. The next step is feature extraction, in this centroid, height and area of image is calculated. After the extraction of features, contraction and expansion is estimated. Depending on this result brightness is varied.

Image Acquisition
Image Acquisition is first step of image processing. This step output is input to the preprocessing. The First Stage in the IRS is eye image acquisition by using special digital camera. From important conditions this image should has high quality and good resolution with good format like JPEG or BMP. The image quality is affected by camera type, the illumination intensity, the space between the camera and the eye, noise, and all events in image capturing environment.

Image Pre-processing
Pre-processing plays an important role as the images are captured from the live videos so they can be affected by the surrounding conditions of the road. The images can be blurred, distorted, very bright or very dark etc. So pre-processing helps to improve the quality of the image that further helps in better analysis of the image and traffic density calculation also.

After acquisition of image some pre-processing is done on acquired image. Pre-processing includes noise filtering using median filter.

Noise Filtering:
Noises in the image will degrade the accuracy of image. In our project we are removing 'Paper and Salt Noise'. This noise can be removed by using Median Filter.

Median Filtering:
Median filtering is used to reduce "salt and pepper" noise. The Median Filter replaces the central estimation of M-by-N neighborhood with its middle value. On the off chance that the area has a middle component, the square places the middle quality there Median filtering can be done easily by using 'medfilt2' function in Matlab

Face Detection

Face detection is a computer technology being used in a variety of applications that identifies human faces in digital images. Face detection also refers to the psychological process by which humans locate and attend to faces in a visual scene.

Face detection can be regarded as a specific case of object-class detection. In object-class detection, the task is to find the locations and sizes of all objects in an image that belong to a given class. Examples include upper torsos, pedestrians, and cars.

Face-detection algorithms focus on the detection of frontal human faces. It is analogous to image detection in which the image of a person is matched bit by bit. Image matches with the image stores in database. Any facial feature changes in the database will invalidate the matching process. A reliable face-detection approach based on the genetic algorithm and the eigen-face technique: Firstly, the possible human eye regions are detected by testing all the valley regions in the gray-level image.

Eye Detection

Eye tracking is the process of measuring either the point of gaze (where one is looking) or the motion of an eye relative to the head. An eye tracker is a device for measuring eye positions and eye movement. Eye trackers are used in research on the visual system, in psychology, in psycholinguistics, marketing, as an input device for human-computer interaction, and in product design. There are a number of methods for measuring eye movement. The most popular variant uses video images from which the eye position is extracted. Other methods use search coils or are based on the electrooculogram. The most accurate methods to track the gaze have been the video-based ones that determine the orientation of an eye or eyes by either remote or head-mounted cameras. With remote cameras, the cameras are fixed on a remote location and the location of the eyes may move relative to the cameras, but with head-mounted ones the cameras are fixed on the head, and the relative location of the eyes stays approximately the same at all times.

Sclera and Pupil Segmentation

The first step is to assume an input eye image of dimensions (320x280) from database. Segmentation or localization is to simplify or change the representation of an image into something that is more meaningful & easier to analyze. Segmentation is the process of partitioning an image into multiple region i.e. set of pixels. Iris can be approximated by two circles, one for iris/sclera and another for iris/pupil boundary. The output of segmentation is iris signature. The circular Hough Transform is used to deduce the radius & center coordinate of pupil & iris region . Hysteresis thresholding for marking edges in iris image by checking the threshold value of image pixel between upper threshold & lower threshold of an image. Inner & outer boundary of iris is localized by finding the edges of iris by using canny edge detection. Iris image gamma values in the range 0-1 enhance contrast of bright region and values greater than 1 enhance contrast in dark region. Iris segmentation is used to locate the boundaries of Iris & Pupil in an image. The result of this is a set of contours extracted from image. Canny edge detection & Hough transform methods are used for segmentation.

Advanges:

1. Less Computational Time
2. Highly Accurate

Applications:

1. Human Computer Interaction .On execution the application makes the brightness level change with the help of eye capacity.
2. Driver Fatigueness Detection to avoid the accidents. In industries,the driver who is handling the machine feels drowsy then the message is send through GSM to the main controller.
3. The real life situation of eye tracking system. Eye tracking is test usability of software,interactive TV, video game, advertisement and other such activity.
4. It can be used to track faces both precisely and robustly.
5. In real life situation, after continuously sitting in front of Laptops or PCs for an hour if the person wants to relax and he/she closes his eyes, automatically the brightness level reduces.

IV. CONCLUSION

The system is developed for application of LCD brightness and fatigue recognition. This can be used as industrial application for detecting drowsiness of operators working in-front of machines so as to avoid changes of accidents. In our project, we have controlled brightness of LCD according to contraction and expansion of eyes. To assess the effectiveness of this technique, first we performed eye detection (localizing the centroid of the iris and pupil) on images from the training set. And also we have extended one more feature of GSM and buzzer. In industries,the driver who is handling the machine feels drowsy then the message is send through GSM to the main controller and alarms on.

ACKNOWLEDGMENTS

We would like to take this opportunity to express our heartfelt thanks to our guide of E&TC Prof. P.R. Shah for his esteemed guidance and encouragement, specially through difficult times. His suggestions broaden our vision and guided us to succeed in this work.

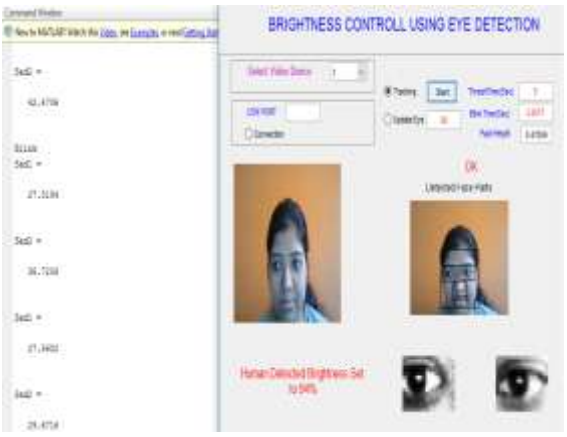

REFERENCES

[1] Ville Rantanen, Toni Vanhala, Outi Tuisku, Pekka-Henrik Niemenlehto, "A Wearable, Wireless Gaze Tracker with Integrated Selection Command Source for Human-Computer Interaction." IEEE TRANSACTIONS ON INFORMATION TECHNOLOGY IN BIOMEDICINE, VOL. 15, NO. 5, SEPTEMBER 2011.

[2] Muhammad Awais, Nasreen Badruddin, and Micheal Drieberg , "Driver Drowsiness Detection Using EEG Power Spectrum Analysis" 2014 IEEE Region 10 Symposium

[3] Nikita Gurudath, H. Bryan Riley, "Drowsy Driving Detection by EEG Analysis Using Wavelet Transform and K-Means Clustering" The 11th International Conference on Mobile Systems and Pervasive Computing.

[4] Feng Lu, Yusuke Sugano, Takahiro Okabe, and Yoichi Sato, "Adaptive Linear Regression for Appearance-Based Gaze Estimation" MANUSCRIPT SUBMITTED TO IEEE TRANS. PAMI, DECEMBER 2013.

[5] Y. Freund and R. Schapire, A decision-theoretic generalization of on-line learning and an application to boosting, Journal of Computer and System Sciences, 55 (1997), pp. 119–139. http://dx.doi.org/10.1006 /jcss.1997.1504.

[6] Y. Freund, R. Schapire, and N. Abe, A short introduction to boosting, Journal of Japanese Society For Artificial Intelligence, 14 (1999), pp. 771–780.

[7] J. Friedman, T. Hastie, and R. Tibshirani, The Elements of Statistical Learning, vol. 1, Springer Series in Statistics, 2001.

[8] H. J´egou, M. Douze, and C. Schmid, Hamming embedding and weak geometric consistency for large scale image search, in European Conference on Computer Vision, vol. I of Lecture Notes in Computer Science, Springer, 2008, pp. 304–317.

[9] Byun, M., Badler, I.N, 2002. “FaacEmote: Qualitative Parametric Modifiers for Facial Animations”, ACM, pp. 343-349. [3] Desilva, C.L., Miyasato, T. and Nakatsu, R., 1997. “Facial Emotion Recognition Using Multi-modal Information”, IEEE International Conference on Information, Communication and Signal Processing, ICICS’97, pp. 397-401

[10] C. Nordqvist, "Medical News Today," July 2012. [Online]. Available: http://www.medicalnewstoday.com /articles/248002.php.

[11] M. M. K. S. S. Arun, "Hypovigilance Warning System: A Review on Driver," 2011 IEEE Control and System Graduate Research Colloquium, p. 67, 2011.

[12] R. Z. P. Tabrizi, "Open/Closed Eye Analysis for Drowsiness," 2008.

